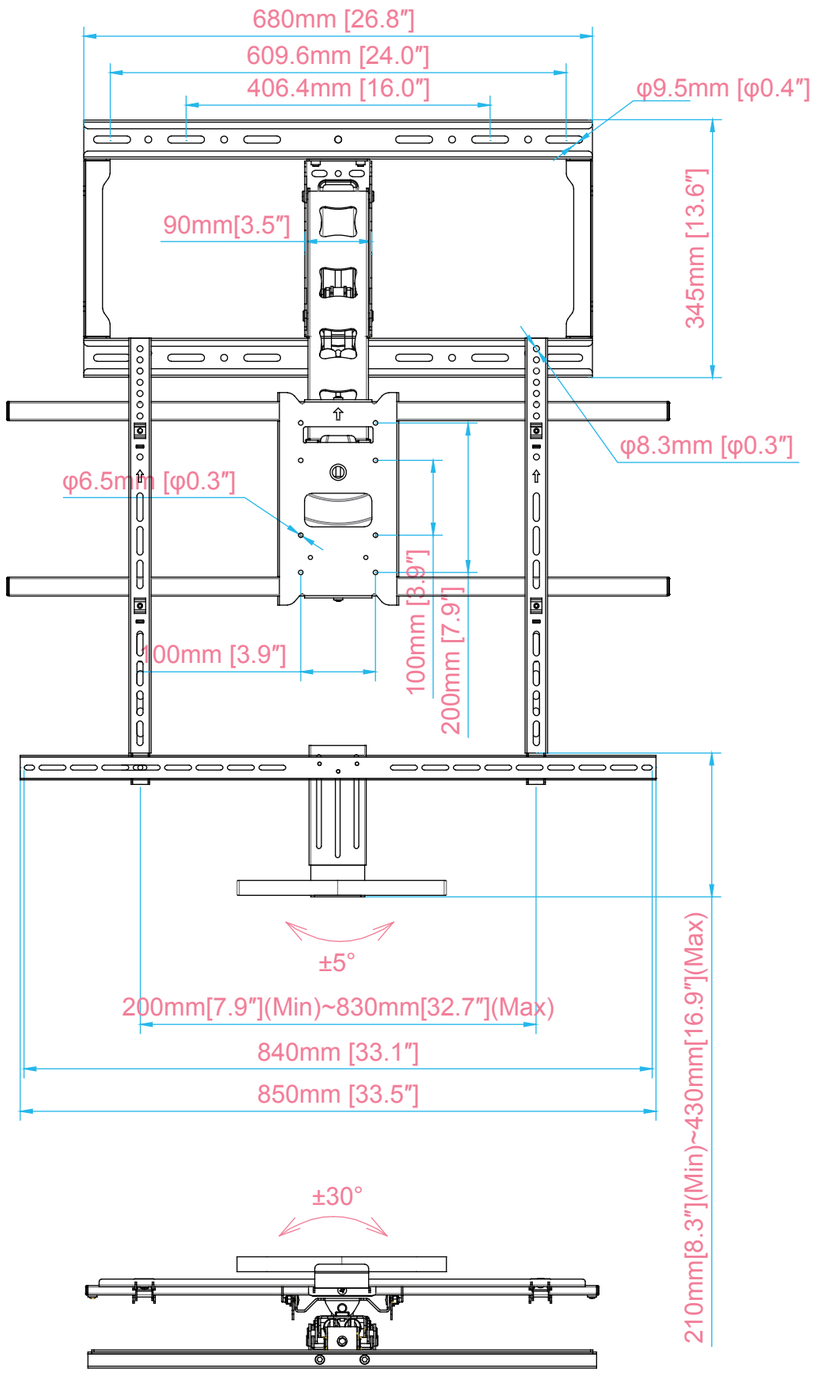

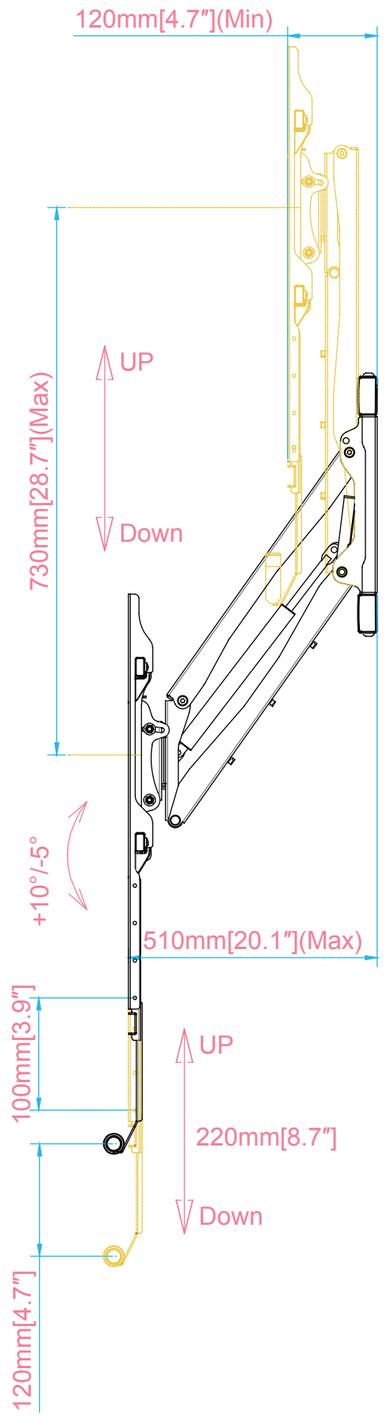
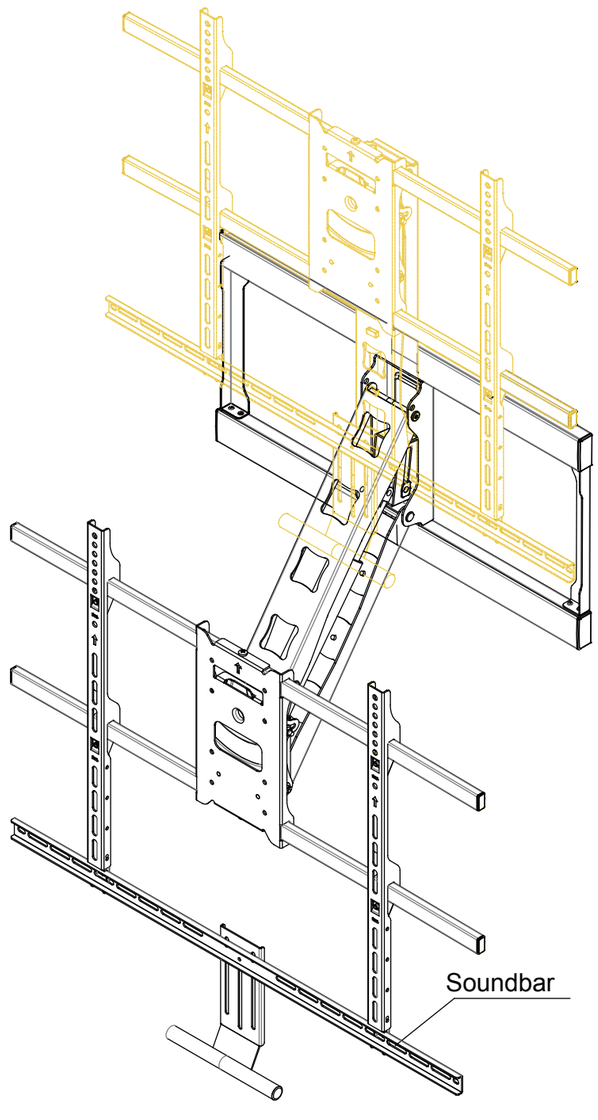
- Specifications:
- Max Load Capacity:55~132lbs(25~60kg)
- TV Dimension:55"-80"
- VESA Standard: 100x100~800x500mm
- Screen Level:±5°;Tilt Range:-5°/+10°;Swivel Range ±30°;